TLC2201 Low Noise Precision Rail-To-Rail Output Operational Amplifier Macro Model

Common-Mode Input Voltage Range

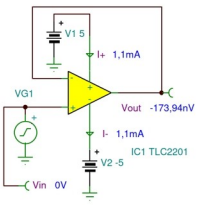

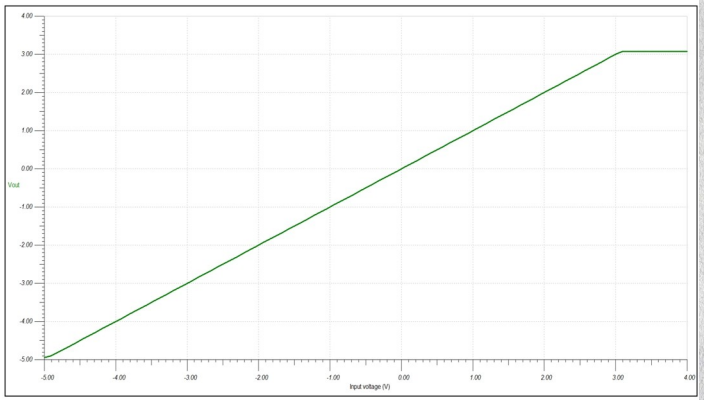

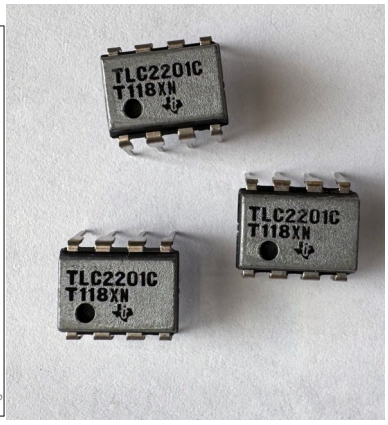

Output Voltage Range

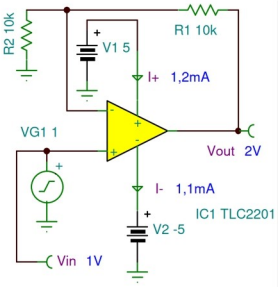

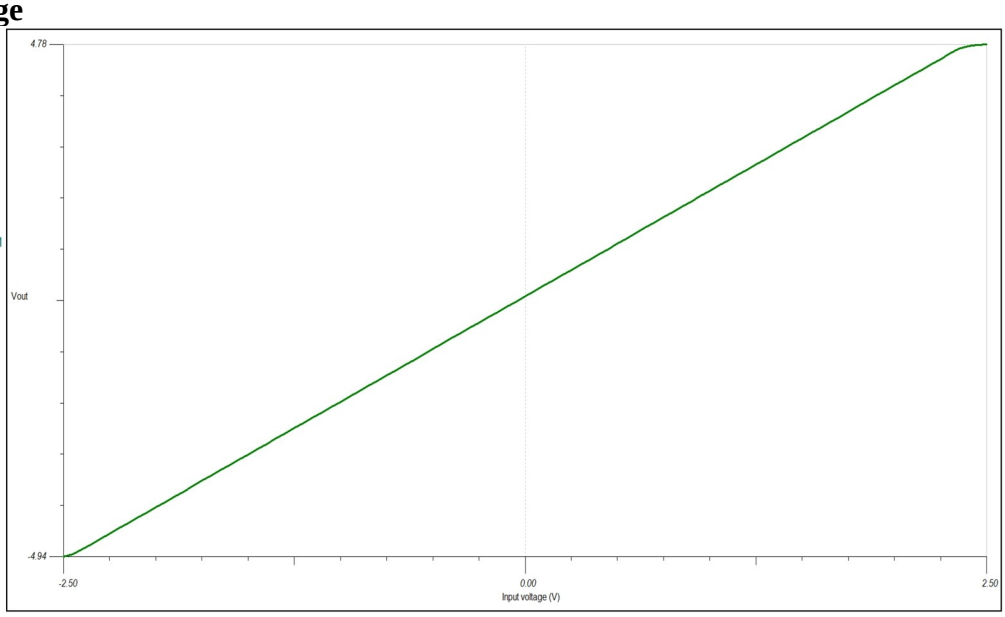

Output Short Circuit Protection

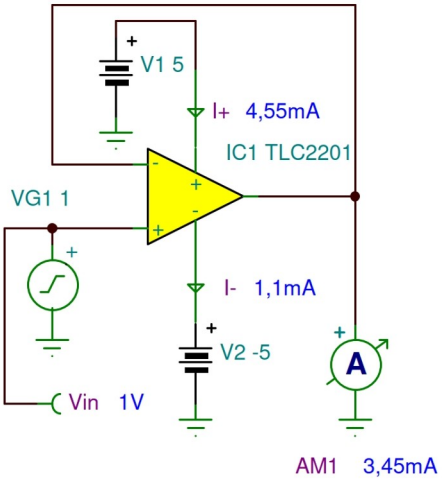

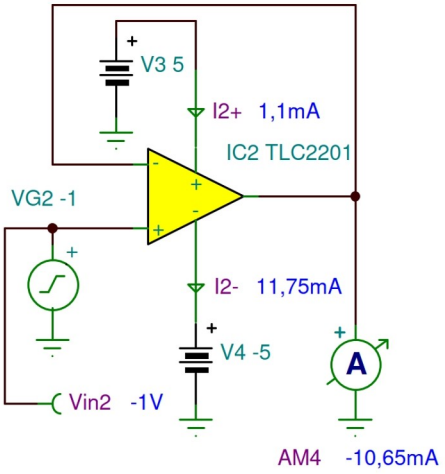

The combination of superior DC characteristics and low-noise performance, together with a common-mode input voltage range extending to the negative rail, makes these devices an excellent choice for high-impedance, low-level signal-conditioning applications in both single-supply and split-supply configurations.

Zabb Csaba